TEXAS STATE UNIVERSITY

The rising STAR *of Texas*

M2 - Three Wheeled Wheelbarrow Analysis

Cesar Sifuentes, Madisen Weaver, Emily Rice, Isac Giron

Sponsor:

Milton Vaverek

Majineering
110 QUAIL CREEK DR.
SAN MARCOS, TX 78666

Product

THE KIT: will be installed on an already existing standard wheelbarrow.
Adjustable height, ergonomic handles and crossmember

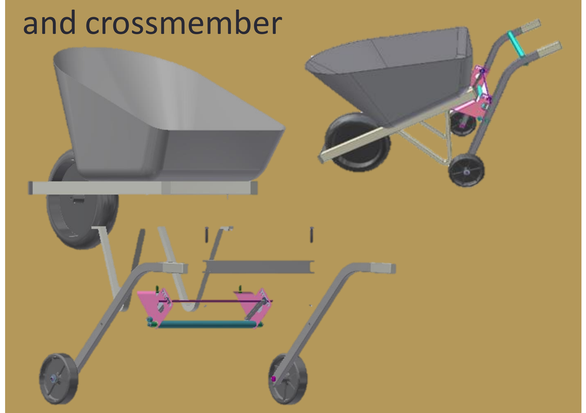

Project

TEAM GOALS:

1. Determine the failure points of the wheelbarrow when loaded with 450 pounds..
2. Choose the thinnest material that can hold load.
3. Optimize the bending manufacturing of the lever tube component to prevent deformation.

BENDING DIE:

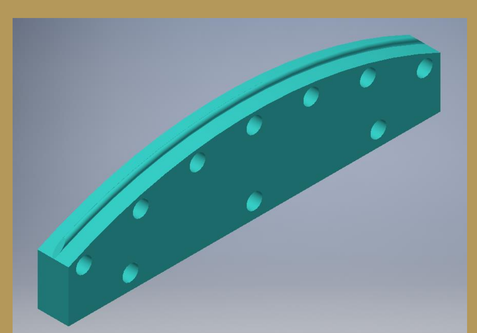

Proposed Design and Analysis

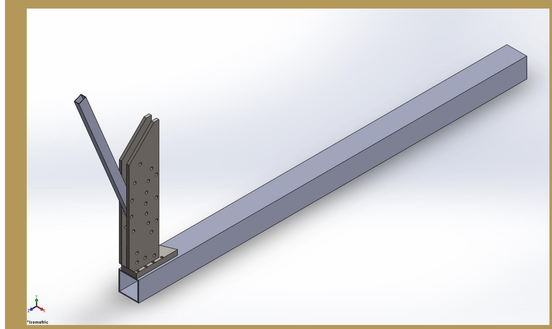

The design to the left using a winch attached to one end of the base, while the other end is attached to the lever. By applying tension to the fixed lever this will to cause the bending of the tube, allowing it to form the shape against the curved die.

STRESS ANALYSIS: We performed a Stress Analysis of the Wheelbarrow with the Kit attached, and of the design to bend the tub.

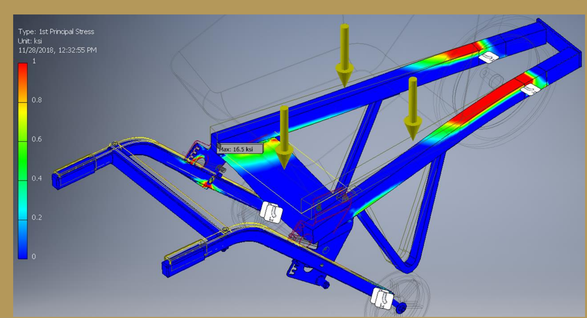

450 FORCE LOAD ON BEAMS WITH GRAVITY

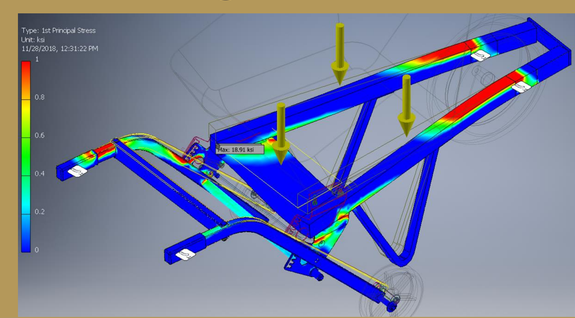

450 FORCE LOAD ON BEAMS WITH GRAVITY & FIXED HANDLES

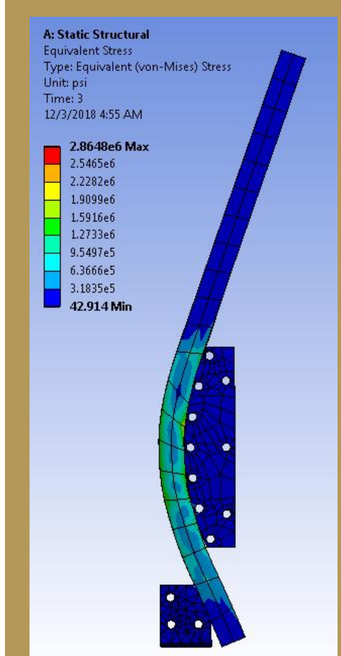

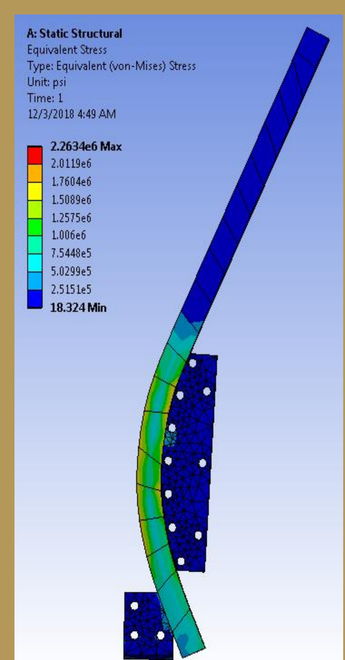

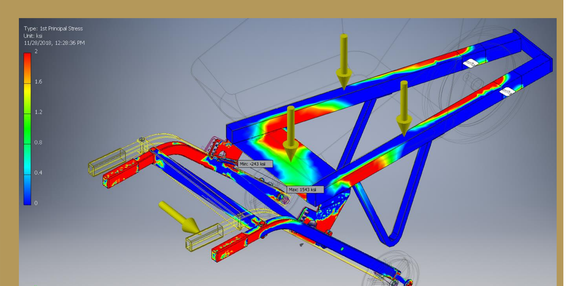

450 LOAD ON BEAMS WITH GRAVITY & 500 FORCE ON HANDLES TO SHOW DRAGGING

Process Finalized

BENDING PROCESS:

- Bent the tube at 135 degrees
- 14- and 16-gauge tubes

RESULTS:

- Buckling of 16ga steel tube – added structural support by welding piece onto die
- Hammering in tube to follow the curve

ACKNOWLEDGEMENTS:
Mark Summers
Austin Talley
Ruben Villareal
Jason Wagner
Ault & Ault Orthodontics