TEXAS STATE UNIVERSITY®

*The rising STAR of Texas*

# E1.05 - Smart Wear (Bracelet)

Keysight Technologies

KEYSIGHT TECHNOLOGIES


**Project Manager**
Tringa Krasniqi-Islami  Christopher Jew  Mohammed Hossain  Stephanie Lopez


## Project Overview

Developed using Keysight's IoT kit, Smart Wear is an IoT bracelet designed to the following:

- Group kids using color-coded LEDs
- Ensure kids stay within a perimeter using alerts
  - LEDs for visual alerts
  - Buzzer for audible alerts
  - Vibration Motor for tactile alerts
- Cloud implementation
- Affordable
- Expandable

## Project Inspiration

- For years, teachers have used color coded t-shirts to keep their students grouped together.
- Smart bands to track kids.
- Smart Wear combines and improves these two ideas into an affordable IoT bracelet.

Colored T-Shirts

Smart Bands

## Approach

- Implement Keysight's IoT kit showing its potential in IoT
- Implement MQTT for server/client communication
- Implement Tactile/Visual/Audible Alerts
- Implement methods to calculate distance over Wi-Fi
  - RSSI, RTT, & K-Means
- Implement a cloud to access data from anywhere
- Use ESP8266 for its low cost and small profile
- Use Arduino IDE for coding both Intel Edison and ESP8266

## GUI

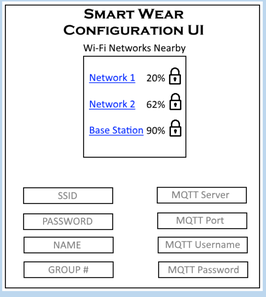


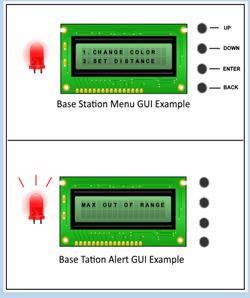


## Project Description

Smart Wear is a low-cost IoT bracelet that can communicate with the Keysight U3000A board via Wi-Fi to send/obtain Information to keep a group of children within a set perimeter.

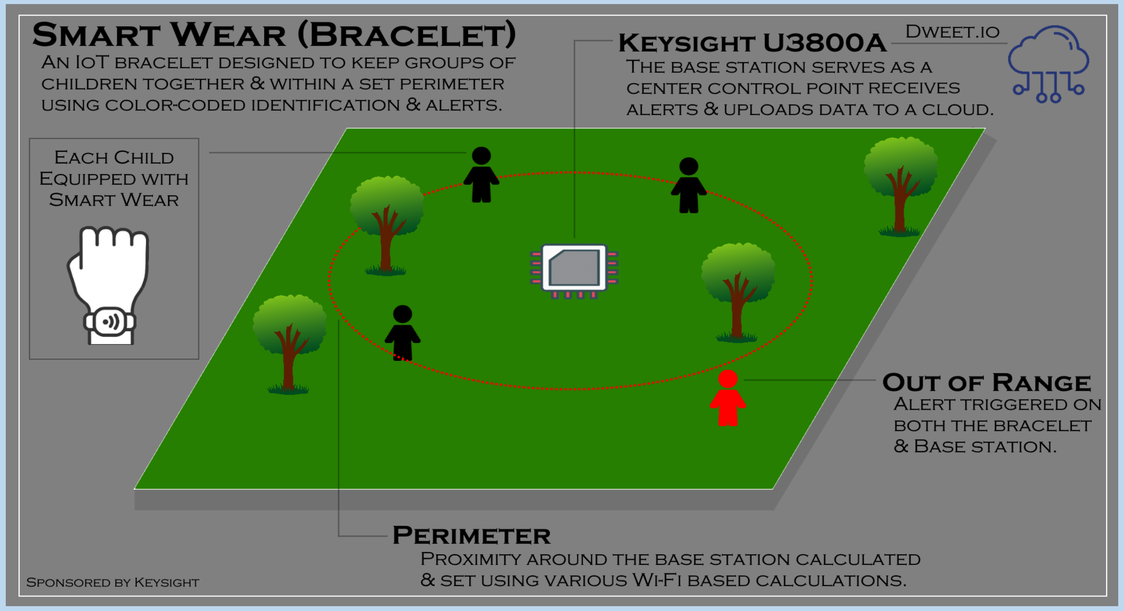


## Design Scheme

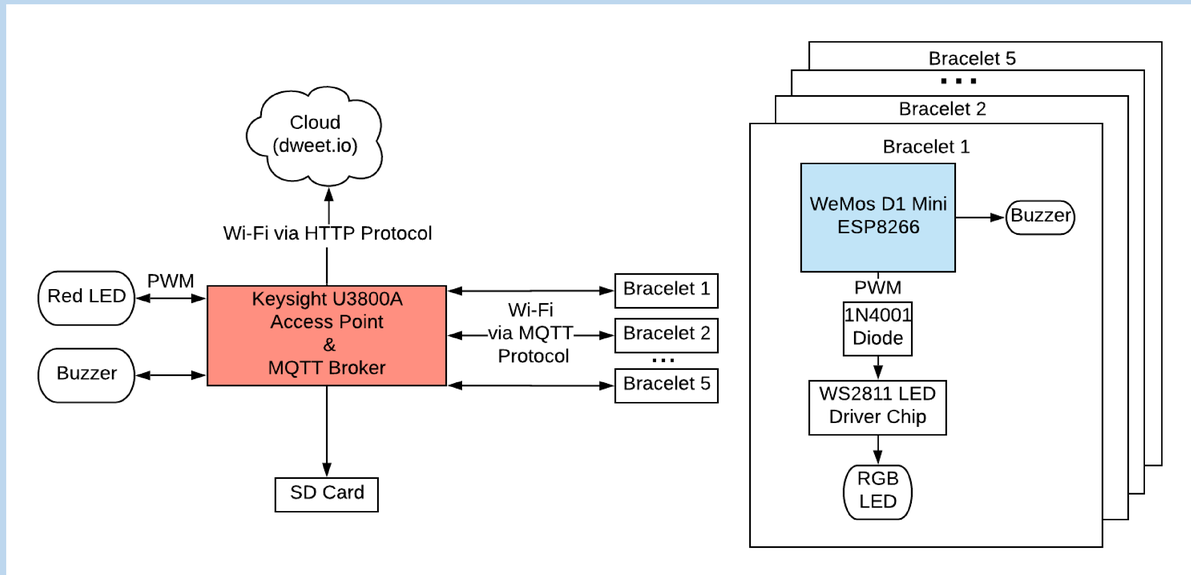


## User Interface

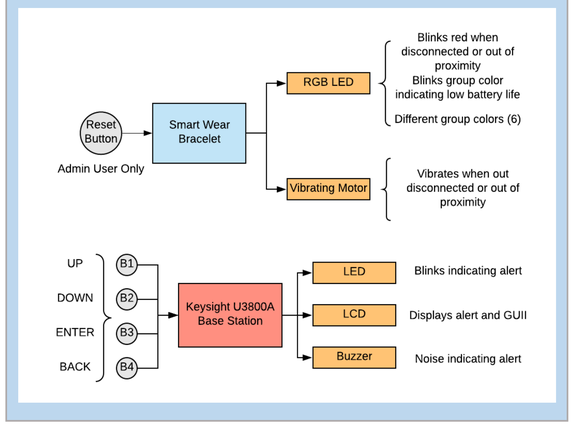


## Next Semester

- Design bracelet enclosure
- Learn Keysight U3800A IoT kit via labs
- Code U3800A as an access point and server
- Code ESP8266 as an access point and client
- Code and design GUIs for the U3800A and ESP8266
- Validate tests of each device
- Set up communication between devices
- Implement distance calculation algorithms

## Stretch Goal

- A hall effect sensor that can implement a magnet on the band of the bracelet to notify the base station user if the bracelet is taken off
- Coordinate implementation via GPS or Google's WPS

## Acknowledgement


- Instructors: **Mr. Lee Hinkle & Dr. McClellan**
- Faculty Advisor: **Mr. Lee Hinkle**
- Keysight Sponsor: **Mr. Arthur Lizotte**
- Administrative Assistant: **Ms. Sarah Rivas & Ms. Chelsea Torres**


## Team Members


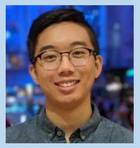


**Project Manager**
Tringa Krasniqi-Islami Christopher Jew Mohammed Hossain Stephanie Lopez