TEXAS STATE UNIVERSITY

The rising STAR *of Texas*

American Solar Challenge: Team E2.05 - Safety and Integration

Members: Alex Greer – Alfredo Balli – Anthony Le – Beau Smith – Chase Berndt

Sponsor: Nathan England

American Solar Challenge

Introduction

The American Solar Challenge (ASC) is a competition for engineering students from colleges and universities across the country to explore renewable energy and develop unique ideas. Our team's objective is to design and integrate a dependable electric safety system that is capable of isolating the battery bay to protect components and the driver.

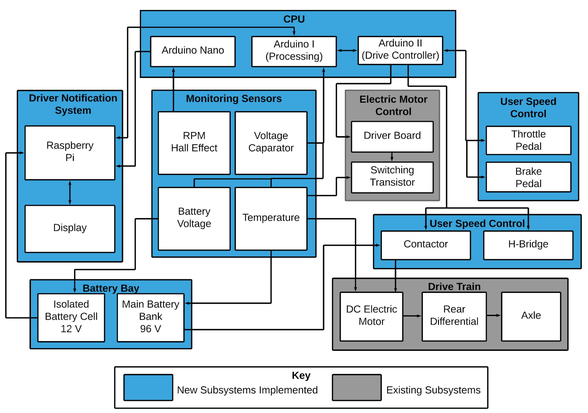

Safety Features	
Temperature Sensors	Mounted on main battery bank, isolated battery cell, DC motor, and EMC fly-back diode.
Voltage Sensors	This ensures calibration between the user's input of speed (pedal position) and supplied voltage to the motor.
Speed Sensor	A sensor mounted at the front right tire to measure speed and display it to the driver.
Kill Switch	The user can physically isolate the batteries in case of safety system failure.
High Voltage/ Low Voltage System Isolation	All low voltage system components have physical isolation from the high voltage system to prevent damage and to keep the safety system on even in the event of an error.
Contactor Switch	Prevent electrical damage to components by isolating the batteries based on implemented software.
Graphical User Interface	The graphical user interface is used to display typical dashboard information to the driver as well as system monitoring information to aid in extending drive times and component life

Our Approach to Safety

Sensors

Temperature Sensor — Voltage Sensor — Speed Sensor

CPU
Outputs PWM signal to run the DC electric motor
Reads data from sensors and switches
Reacts autonomously to input from sensors
Takes input from the driver to control speed and direction

User Speed Control
Gas Pedal is a 5K Ohm potentiometer that provides an analog signal to the Arduino to control PWM output.

Contactor Switch
Low voltage controlled switches to connect and disconnect power to the motor

Drive Train
Series-wound DC motor powering the rear-differential of the car

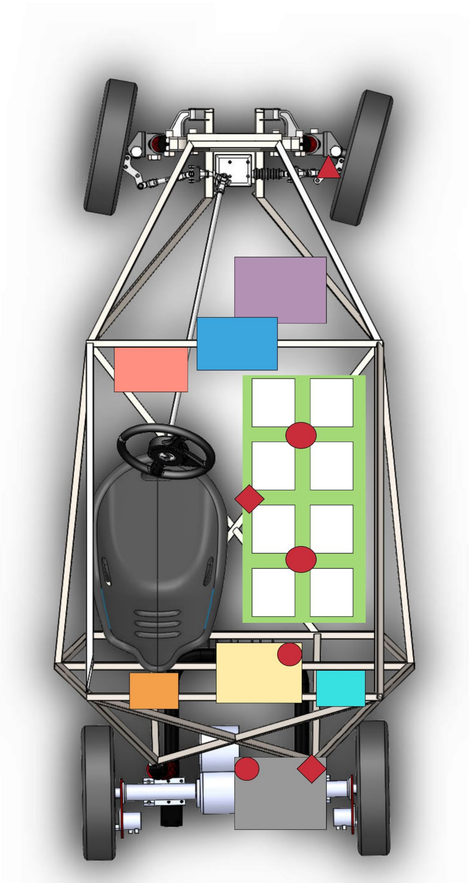

Driver Notification System
Graphical User Interface that will display relevant information to the driver

Battery Bay
Eight 12V batteries power the DC electric motor and high-voltage components

Electric Motor Controller
Receives PWM signal from Arduino to control the switching transistor and provide power to the motor

Forward/Reverse Selector
A mechanical H-bridge used to control the directional rotation of the motor

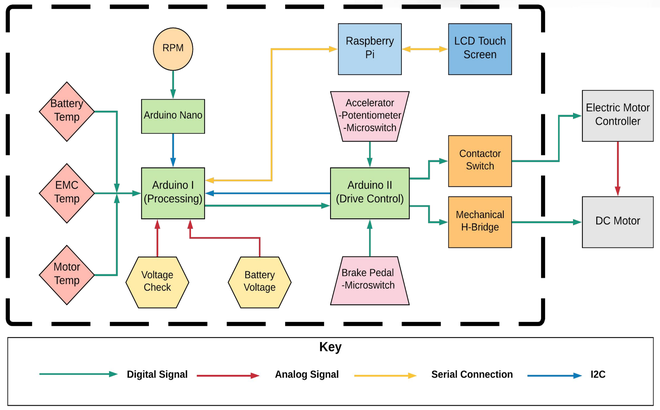

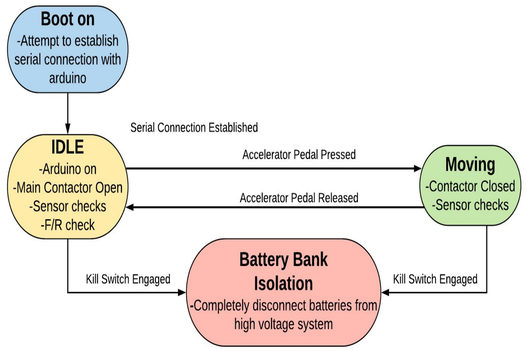

Implementation

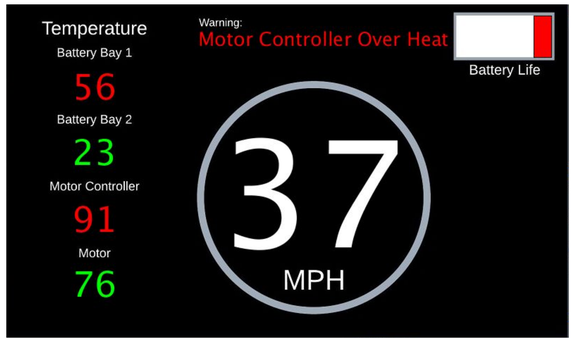

Components	Parameters
Temperature Cutoff	
Battery Bank	55℃/131℉
EMC	88℃/190℉
DC Electric Motor	100℃/212℉
Voltage Cutoff	
EMC	If the potentiometer expected output is +/- 20% different from the voltage at the EMC

Alex Greer — Alfredo Balli — Anthony Le — Beau Smith — Chase Berndt

Acknowledgments	
Course Instructors	Professor Lee Hinkle Professor Mark Welker
Faculty Advisor	Doctor Stan McClellan
Sponsor	Mister Nathan England